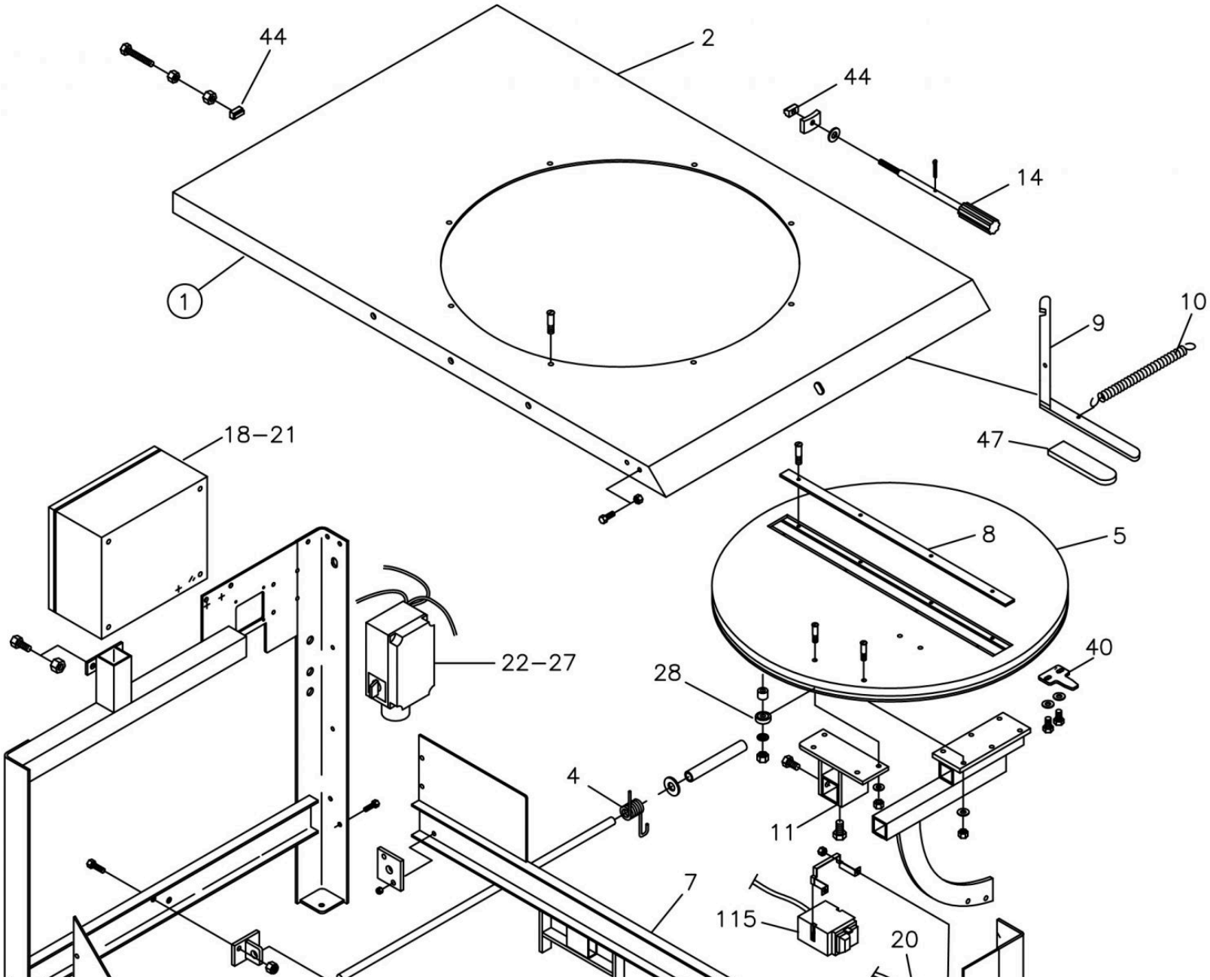
44
2
44
14
1
9
10
18–21
47
8
5
22–27
40
28
4
11
7
115
20

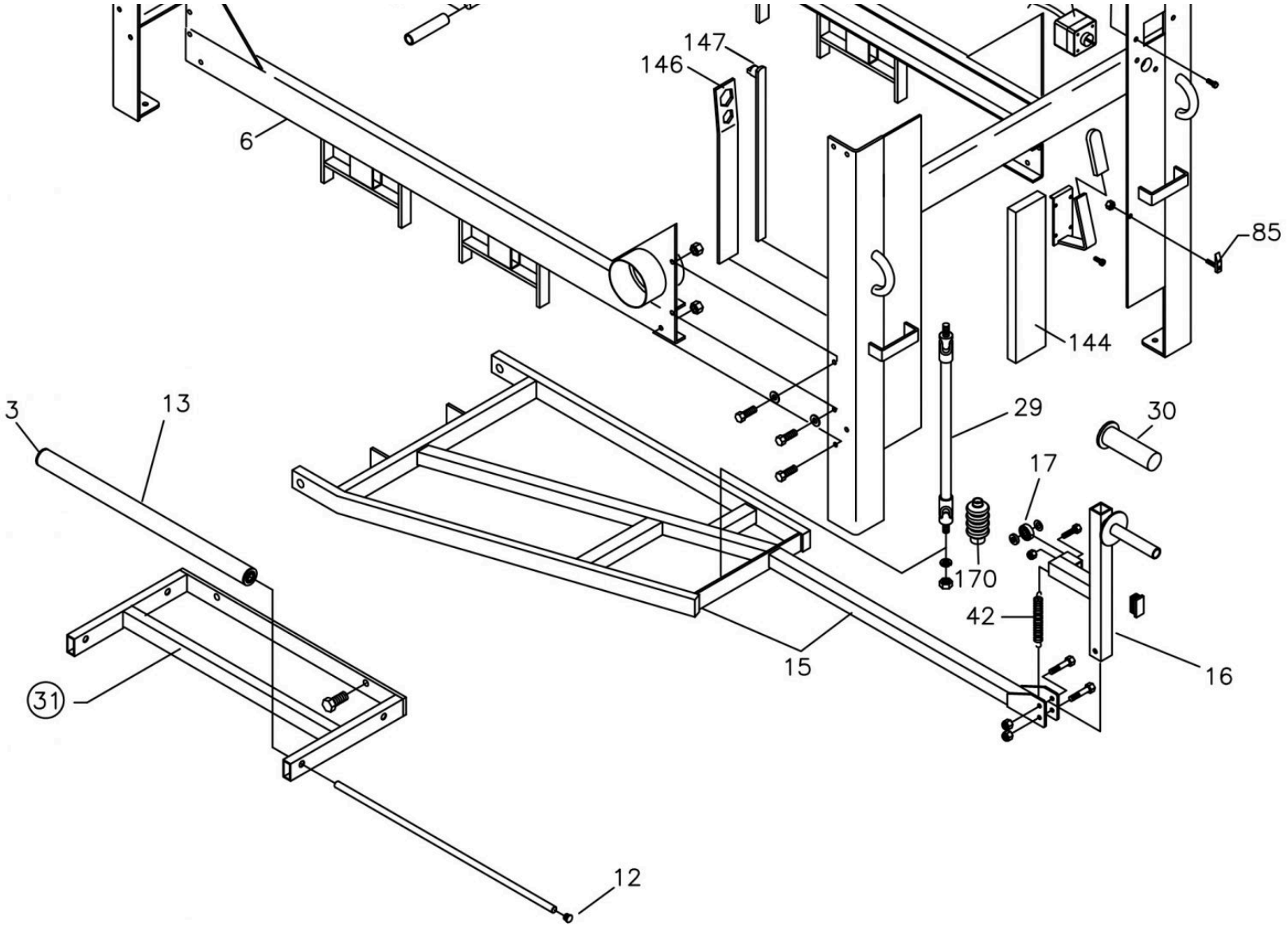
147
146
6
85
144
3
13
29
30
17
170
42
15
16
31
12

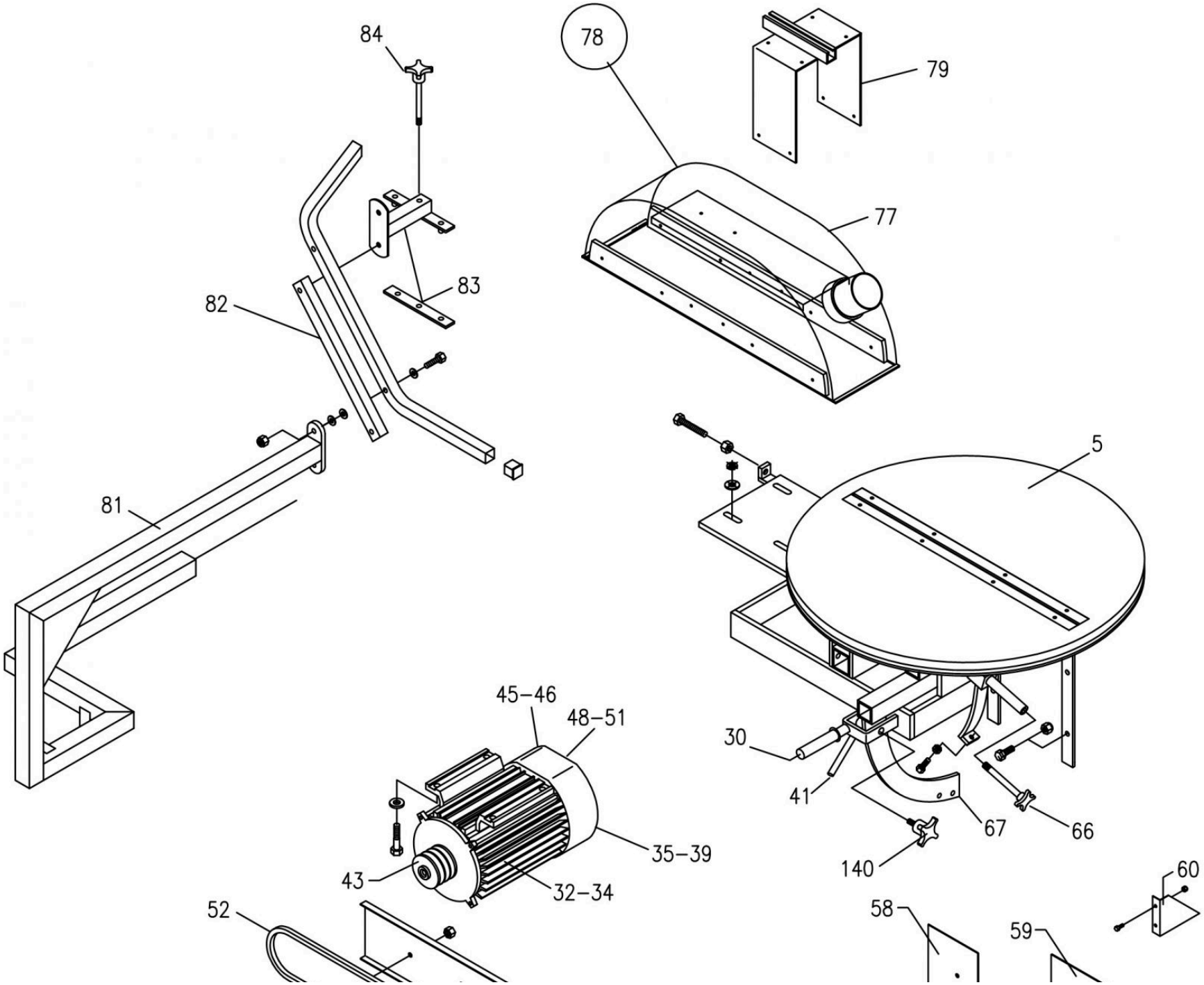
84
78
79
77
83
82
81
5
45–46
48–51
30
41
67
66
140
35–39
43
32–34
52
58
59
60

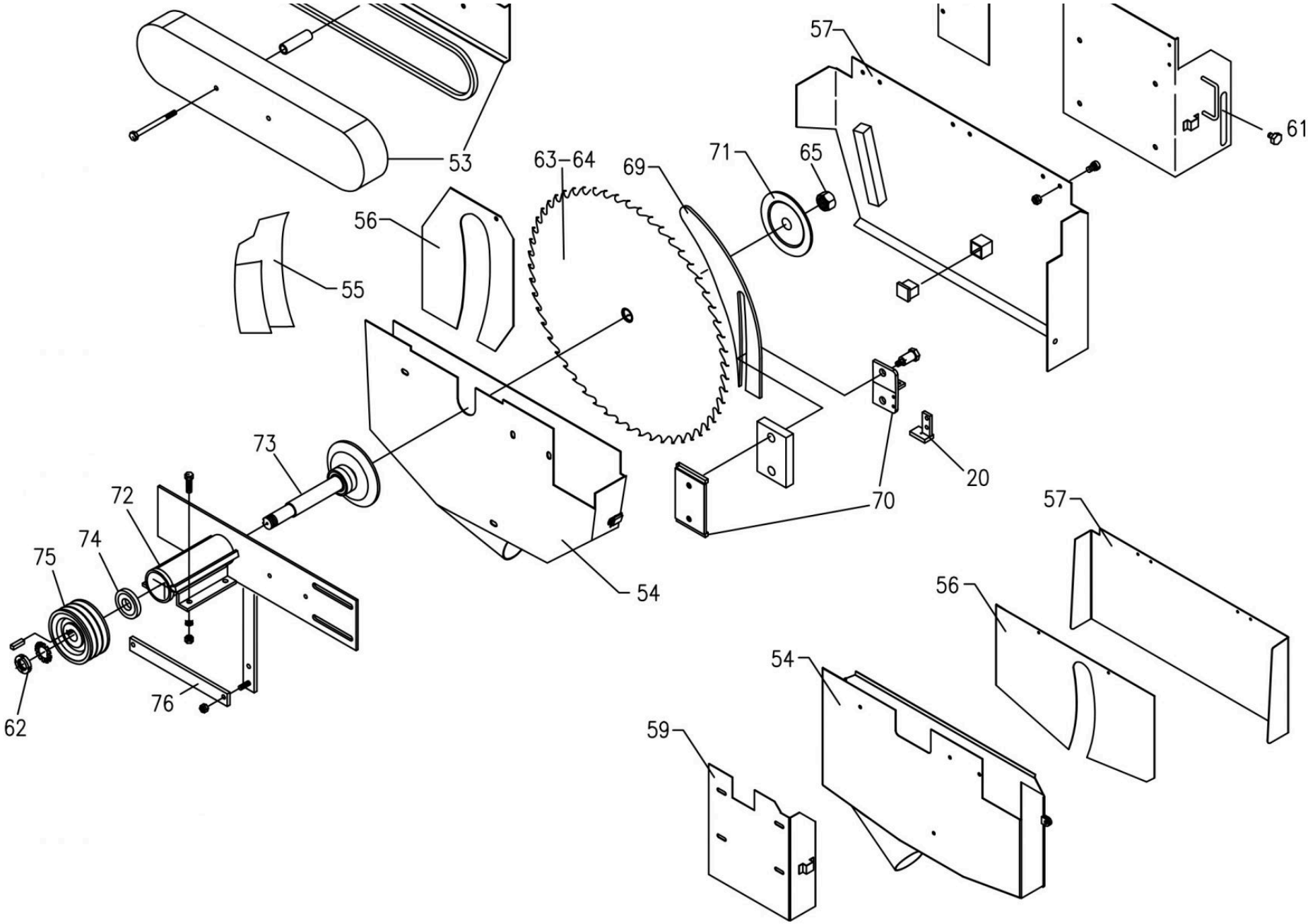
57
61
53
63–64
69
71
65
56
55
73
72
74
75
62
76
54
70
20
57
56
54
59